Original User Manual

Series Industrial PC

Christ Electronic Systems GmbH

Alpenstraße 34

87700 Memmingen

06/2023

www.christ-es.com

Instruction Manual: Industrial PC

1 Identification

Target group

This document is not intended for end customers! Necessary safety instructions for the end customer must be passed on by the machine builder or system provider and adopted in the respective national language.

Intended use

The devices described in this documentation are intended to enale the user to control, operate, observe, drive and viualise certain processes.

Technical changes

Christ Electronic Systems GmbH reserves the right to change the information, designs and technical data contained in this documentation without prior notice.

History

The following editions of the manual have already been published:

Version	Comment
03/2023 Rev. 00	First edition
06/2023 Rev. 01	Chapter 1 Identification: Insert revision in the history; Revision of design of safety instructions Chapter 3.1 External Interfaces: Insert safety instruction Specification Chapter 4 Mounting: Remove safety instruction Danger from electric shock. Insert safety instruction Power Supply. Chapter 4.2 Connection of the power supply: Insert safety instruction Connection power supply Chapter 5 Commissioning: inserted Chapter 5.1 Function of the power button: inserted

Table 1: History

Design of safety instructions

The general structure of the safety instructions is shown below:

NOTICE	
	Type of hazard and source of hazard Consequences in the event of non-compliance with the guideline ➢ Measures to avoid hazards

The meaning of the colours of the safety instructions is shown below:

⚠ DANGER	
	Indicates an imminent danger Failure to follow the instructions may result in death or serious injury.

⚠ WARNING	
	Indicates a dangerous situation Failure to follow the instructions may result in serious injury.

⚠ CAUTION	
	Indicates a possible dangerous situation Failure to follow the instruction may result in injury.

NOTICE	
	Indicates user tips and useful information Important information to avoid malfunctions.

Instruction Manual: Industrial PC

2 Product description

Industrial PCs, as the heart of the machines in control cabinets, ensure smooth operation. The requirements placed on them are very different. For this reason, we offer our customers numerous product variants.

For a particulary long livetime, there are no moving parts in the Industrial PCs. The Box PCs with passive cooling are therefore also particularly suitable for harsh industrial environments.

Another advantage is the industrial-grade components that are available over a long period of time. The optional integrated UPS prevents data loss during power fluctuations. If the power fails, the devices are shut down properly.

The Industrial PCs can be loaded with either Windows or Linux before delivery and are then immediately ready for use.

Thanks to the compact housing design, Christ Industrial Computers can also be optimally used in confined spaces. Despite their small size, they deliver high performance when required.

Whether for IIoT applications or computing-intensive automation applications, the portfolio of industrial PCs meets a wide range of requirements. The processor performance classes Intel® Celeron® or Intel® Core™ i3, i5, or i7 are suitable for a wide range of applications.

Memory expansion is also possible without any problems.

2.1 System Overview

Argon

CPU	Intel® Celeron™ N3350 1.1 GHz
Graphic	Intel® HD Graphics 500 200 Hz
Memory	1 x DDR3 Slot, max. 8 GB
BIOS	AMI Optio 5 BIOS
Interfaces	2 x USB 3.0 Port (Type A) 2 x 1 GBit Ethernet (RJ45) 1 x RS-232 / RS-422 / RS-485 (Bios setting) (RJ50) 1 x Display Port 1.0

Table 2: System overview Argon

Titanium

CPU	Intel® Celeron™ 3965U 2.2 GHz	Intel® Core™ i3-7100U 2.4 GHz	Intel® Core™ i5-7300U 2.6 GHz	Intel® Core™ i7-7600U 2.8 GHz
Graphic	Intel® HD Graphics 610	Intel® HD Graphics 620		
Memory	2 x DDR4 slot, in summary max. 32 GB			
BIOS	AMI Optio 5 BIOS			
Interfaces	4 x USB: 2 x USB 2.0 Port (Type A); 2 x USB 3.0 Port (Type A) 2 x 1 GBit Ethernet (RJ45) 1 x RS-232 / RS-422 / RS-485 (Bios setting) (Sub-D) 1 x Display Port 1.1			

Table 3: System overview Titanium

2.2 Housing Variant Industrial PC

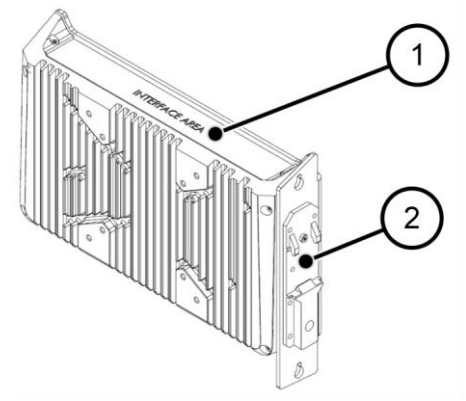

Illustration 1: Industrial PC

1	DIN Rail, 35 mm x 7.5 mm, DIN Rail 35 mm x 15 mm
2	Interface Area

Table 4: Industrial PC

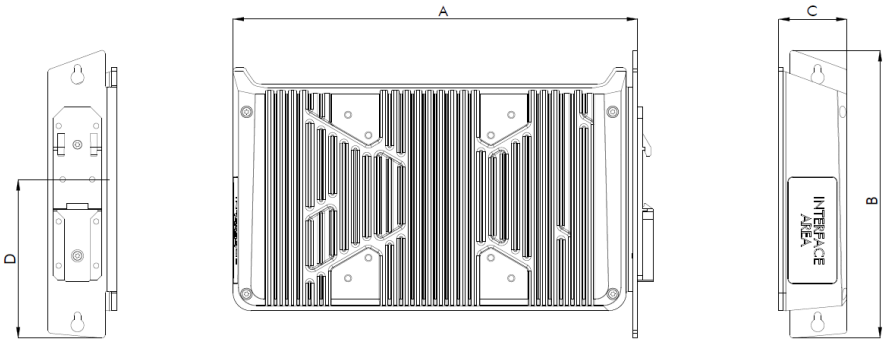

Illustration 2: Dimensions Industrial PC

Dimensions are geven in millimeters.

A	B	C	D
248	176	42	97

Table 5: Dimensions Industrial PC

3 Description Hardware

The description of the hardware refers to the device interfaces and the possible extensions for the device.

3.1 External Interfaces

NOTICE	
	External cable for Power Supply Malfunction occur ➢ Prepare a proper earth connection on the power supply

NOTICE	
	Signal and data cables Malfunction occur ➢ Signal and data cables must be shielded and of high quality.

NOTICE	
	Operating the interfaces outside their intended specification Malfunctions occur and the electronics of the device can be damaged or completely broken ➢ All interfaces must be operated within their specification. Only cables and components that meet the requirements for the intended use of the interfaces may be connected.

Supply Connector screwable

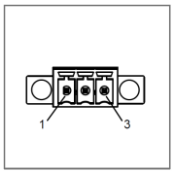

Mating Connector	Phoenix Connector MC 1,5 / 3-STF-3.5 (screwable)	
PIN	**Function**	**Description**
1	GND	Ground
2	FE	Functional Earth
3	+24 VDC	Supply

Table 6: Pinout Supply Connector screwable

USB Host 2.0 (Type A)

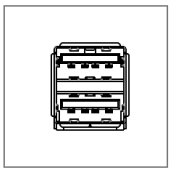

PIN	Function	Description
1	VBUS	USB VCC
2	D-	USB Data-
3	D+	USB Data+
4	GND	USB Ground

Table 7: Pinout USB 2.0

Instruction Manual: Industrial PC

USB Host 3.0 (Type A)

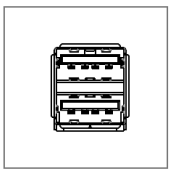

PIN	Function	Description
1	VBUS	USB VCC
2	D-	USB Data-
3	D+	USB Data+
4	GND	USB Ground
5	StdA_SSRX-	SuperSpeed transmitter differential pair
6	StdA_SSRX+	SuperSpeed transmitter differential pair
7	GND_DRAIN	Ground for signal return
8	StdA_SSTX-	SuperSpeed receiver differential pair
9	StdA_SSTX+	SuperSpeed receiver differential pair

Table 8: Pinout USB 3.0

Ethernet Gigabit

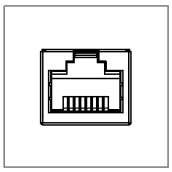

PIN	Function	Description
1	D1+	Transmit Data +
2	D1-	Transmit Data -
3	D2+	Receive Data+
4	D3+	Bidirectional +
5	D3-	Bidirectional -
6	D2-	Receive Data -
7	D4+	Bidirectional +
8	D4-	Bidirectional -

Table 9: Pinout Ethernet Gigabit

WLAN

Mating Connector	RP-SMA
Transmission Standard	802.11 ac/a/b/g/n (2.4 GHz, 5 GHz)

Table 10: Pinout WLAN

Instruction Manual: Industrial PC

Serial Connector (Titanium)

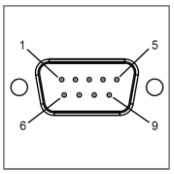

	RS-232		RS-422		RS-485	
PIN	Function	Description	Function	Description	Function	Description
1	DCD	Data Carrier Detect	TX-	Transmitter Differential Pair -	DATA-	Data Differential Pair A
2	RX	Receive Data	TX+	Transmitter Differential Pair +	DATA+	Data Differential Pair B
3	TX	Transmit Data	RX+	Receiver Differential Pair +	--	--
4	DTR	Data Transmit Ready	RX-	Receiver Differential Pair -	--	--
5	GND	Ground	GND	Ground	GND	Ground
6	DSR	Data Set Ready	--	--	--	--
7	RTS	Ready To Send	--	--	--	--
8	CTS	Clear To Send	--	--	--	--
9	RI	Ring Indicator	--	--	--	--

Table 11: Pinout Serial Connector Titanium

Serial Connector (Celeron N3350 Argon)

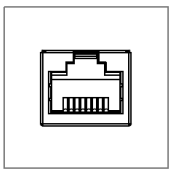

	RS-232		RS-422		RS-485	
PIN	Function	Description	Function	Description	Function	Description
1	DSR	Data Set Ready	--	--	--	--
2	GND	Ground	GND	Ground	GND	Ground
3	GND	Ground	GND	Ground	GND	Ground
4	TXD	Transmit Data	RX+	Receiver Differential Pair +	--	--
5	RXD	Receive Data	TX+	Transmitter Differential Pair +	DATA+	Data Differential Pair B
6	DCD	Data Carrier Detect	TX-	Transmitter Differential Pair -	DATA-	Data Differential Pair A
7	DTR	Data Terminal Ready	RX-	Receiver Differential Pair -	--	--
8	CTS	Clear To Send	--	--	--	--
9	RTS	Request To Send	--	--	--	--
10	RI	Ring Indicator	--	--	--	--

Table 12: Pinout Serial Connector Celeron N3350 Argon

Display Port

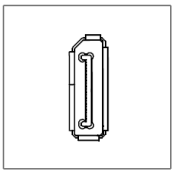

PIN	Function	Description
1	DP data 0+	DP data 0+
2	GND	Ground
3	DP data0-	DP data0-
4	DP data1+	DP data1+
5	GND	Ground
6	DP data1-	DP data1-
7	DP data2+	DP data2+
8	GND	Ground
9	DP data2-	DP data2-
10	DP data3+	DP data3+
11	GND	Ground
12	DP data3-	DP data3-
13	CONFIG1 CAD	Cable adapter recognized
14	CONFIG2	Ground (Pull-Down)
15	AUX_CH+	Additional device +
16	GND	Ground
17	AUX_CH-	Additional device -
18	HPD	Hot Plug recognized
19	GND	Ground
20	DP_PWR 3,3V	Power Supply DP

Table 13: Pinout Display Port

With the DP1.0 it is not possible to display an image on DVI / HDMI devices. An active adapter with properties of DP++ is required for this.[1]

Display Port 1.1 is also known as "Dual-Mode Display Port" and "Display Port++". This allows compatibility with DVI and HDMI.

[1] The Argon board uses DP1.0

3.2 Add-On

In the following all extension possibilities are shown.

3.2.1 UPS (Uninterruptible Power Supply)

Energy Storage	400 Ws / 650 Ws
Charge Duration	90 % in 45 seconds 100 % in 80 seconds
Configuration	Shutdown Time Dimming Time Dimming Intensity

Energy storage value: see technical data sheet.

The instruction for the UPS can be found in the download section of the Christ website: Downloads

The device was operated with the following conditions: operating system Windows 10 IoT, no applications.
It must be ensured that the customer application is ended quickly enough for the IPC to shut down properly. Otherwise no protection against data loss or any other disfunction can be guaranteed. Depending on the CPU utilization and peripherals, the buffer time can be significantly shorter.
The exact buffer duration must be determined anew in every system setup.

Intel® Celeron™ 3965U	59 s
Intel® Core™ i3-7100U	57 s
Intel® Core™ i5-7300U	34 s
Intel® Core™ i7-7600U	38 s
Intel® Celeron™ N3350	99 s

Table 14: UPS buffer duration

3.2.2 Add On Interface

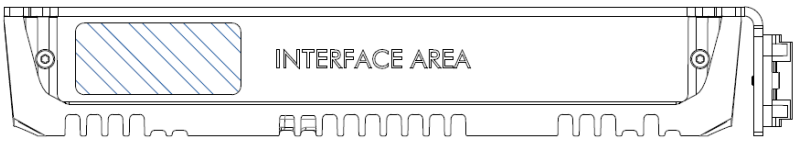

USB 2.0

Interface	2 x USB Host 2.0 (Type A)
Max. Workload	0,5 A for both interfaces

Table 15: Add On USB

3.2.3 Add On Interface front

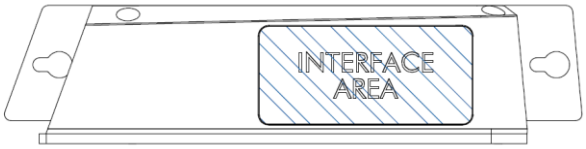

USB 2.0 front

Interface	1 x USB Host 2.0 (Type A)
Degree of protection	IP64 (IP67 with protection cap)

Table 16: Add On front USB 2.0

Power Button front

Type	1 x MCS 16 (Manufacturer: Schurter)
Degree of protection	IP65

Table 17: Add On front Power Button

4 Mounting

This chapter describes all the steps for assembly. The following warnings are safety instructions that must be applied throughout the assembly chapter and in every other life cycle of the device.

NOTICE	
	Power Supply Disturbance of the proper operation ➢ The device must be operated with protective low voltage (< 28.8 VDC).

⚠ WARNING	
	Dropping a device Injuries and bruises to the legs and / or feet ➢ Wear safety shoes

Note for the installation site

This device is not designed for outdoor use.

Make sure that the ambient temperature and humidity are within the ranges which are specified under Environmental Conditions.

Do not install the device directly in the sunlight.

Make sure that the device is installed so that is accessible for the operator.

Installation instructions

Check the package contents for any visible damage and for completeness.

In case of damage, do not install the device and contact the Christ Service.

4.1 Torque

All screws must be tightened with a minimum torque.

Screw	Torque
M3	1 Nm
M4	2,3 Nm

4.2 Connection of the power supply

NOTICE	
	Short circuit Power Supply / device may be damaged ➢ The power supply connetion must be mounted in a voltage-free state.

Use conductors with a cross-section of 0.75 mm² to 1.5 mm². Use the MC 1,5/ 3-STF-3,5 BKBDWH:GND Q PCB connector from Phoenix.

Strip the insulation from the individual wires of the conductor (1). Insert these into the connection contacts (3) of the PCB connector and tighten the screw contacts (2) with a screwdriver and a maximum torque of 0.3 Nm.

The rear view (4) of the connector is shown for clarification.

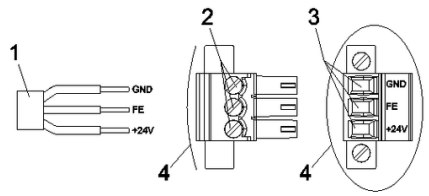

Illustration 3: Connection of the power supply

4.3 Earth Connection

NOTICE	
	Earthing not connected Not guaranteed functionality of the device ➢ All earth connections must be connected to an earth point

At the earthing connection, a line must be laid to the central earthing point of the control cabinet or the system. The earthing connection is marked with a label.

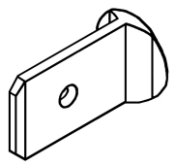

Earth connection

Label

4.4 Mounting Industrial PC

There are two ways to assemble the Industrial PC.

- Way 1: top-hat rail
- Way 2: wall

Instruction Manual: Industrial PC

Mounting on the top-hat rail:

Step 1:

Hook the Industrial PC onto the fastening rail at an angle from above. Press the Industrial PC down until it hooks into place.

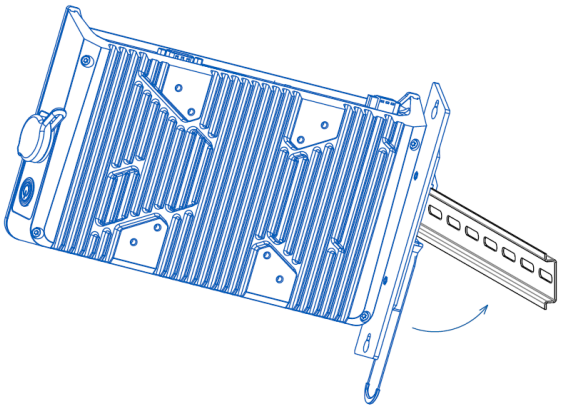

Illustration 4: Mounting top-hat rail Step 1

Step 2:

The industrial PC hangs on the fastening rail.

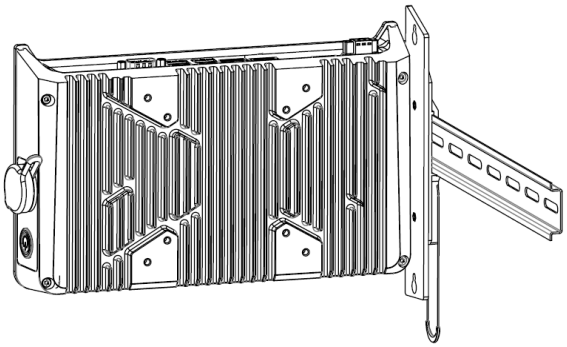

Illustration 5: Mounting top-hat rail Step 2

Mounting on the wall:

Step 1:

Screw in the screws. The distance between the wall and the screwhead about 5 mm.

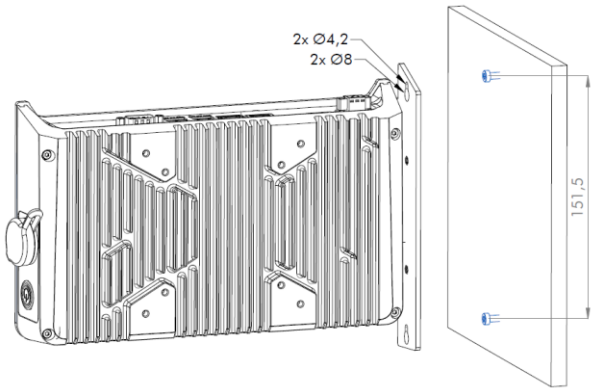

Illustration 6: Mounting wall Step 1

Step 2:

Slide the IPC with the larger hole onto the screws previously screwed in.

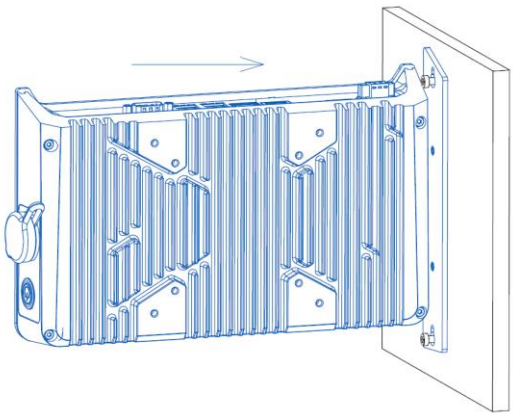

Illustration 7: Mounting wall Step 2

Step 3:

Let the IPC slide down.

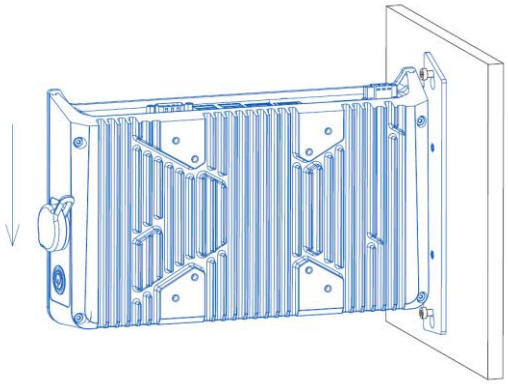

Illustration 8: Mounting wall Step 3

Step 4:

Tighten screws.

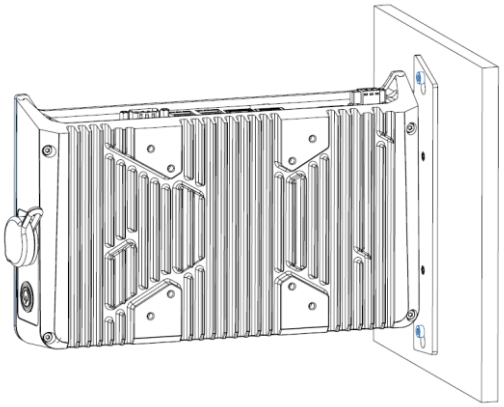

Illustration 9: Mounting wall Step 4

4.5 Dismounting Industrial PC

Dismounting on the top-hat rail:

Step 1:

Pull down on the pull cord to release the Industrial PC.

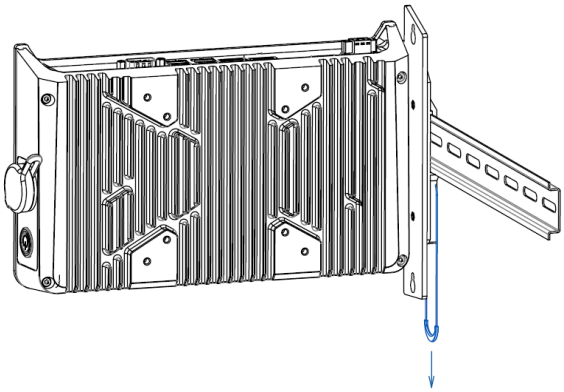

Illustration 10: Dismounting Industrial PC Step 1

Step 2:

Tilt the Industiral PC forward with the pull cord pulled at the bottom and unhook it at the top.

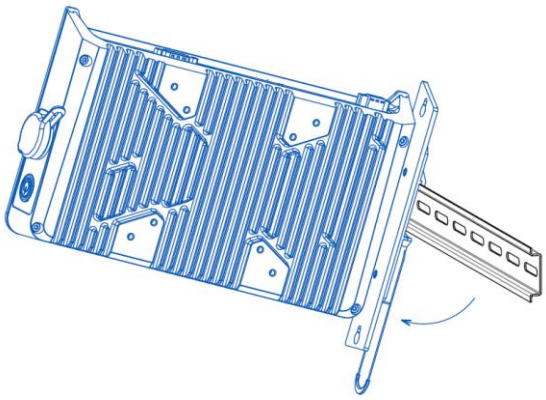

Illustration 11: Dismounting Industrial PC Step 2

Dismounting on the wall:

Step 1:

Loosen the screws so that the distance between the wall and the screwhead is about 5 mm.

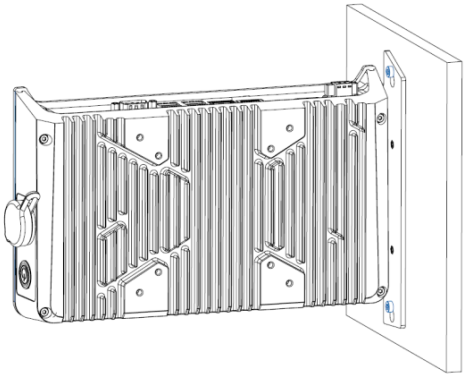

Illustration 12: Dismounting wall Step 1

Step 2:

Push the IPC upwards.

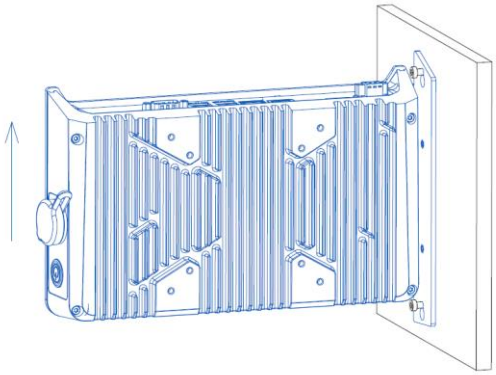

Illustration 13: Dismounting wall Step 2

Step 3:

Lift the IPC away from the wall with the screws through the larger hole.

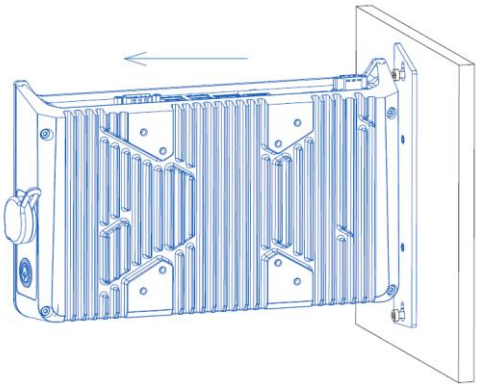

Illustration 14: Dismounting wall Step 3

5 Commissioning

To put the device into operation, connect the power supply to the unit.

The device starts.

Further steps for commissioning are not necessary.

5.1 Function of the power button

If the device has a power button, it behaves according to the following standard.

When the device is plugged into the power supply, the device boots up without having to press the power button.

If the power button is pressed while the device is running, the device shuts down.

If the power button is pressed while the device is not running, the device starts up. The power supply must be present at the device.

Notice:

A different behaviour may occur if the device does not have the standard configuration.

6 Accessories and Spare Parts

The accessories listed here have been checked by Christ and are compatible with the products. The following accessories are available:

6.1 Power supply

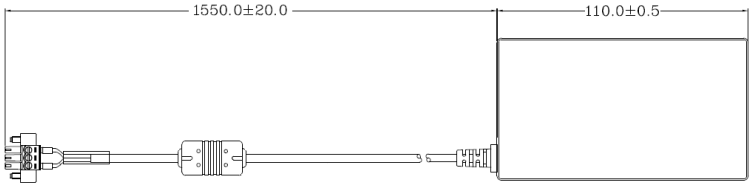

Input Voltage	90 - 264 VAC
Input Current	max. 1 A
Input Frequency	47 - 63 Hz
Consumption with unloaded output	max. 0.075 W
Output Voltage	24 VDC
Output Current	max. 2.5 A
Temperature Range Operation	0 - 70°C
Humidity Operation	20 - 80% RH non condensing

Table 18: Power supply

7 Software

The Software chapter describes settings and functions that may be required to use the device.

7.1 BIOS Basic Settings

AMI BIOS ROM has built-in settings program that allows users to make basic settings. This information is stored in a battery supported CMOS RAM, so it remains stored even when there is no power supply.

Accessing the BIOS works by pressing the "Del" key several times while the device is booting.

The following tabs in the BIOS enable various settings.

Main	Set date
Advanced	Make advanced BIOS settings like: COM, ACPI, etc.
Chipset	Enter host bridge parameters
Security	Set administrator password
Boot	Set Boot Option
Save & Exit	Save the settings made and initiate a restart. (Also possible with the F4 key on the keyboard)

Table 19: BIOS

Pressing F3 and confirming the query "Load Optimized Defaults?" with "Yes" restores the delivery state.

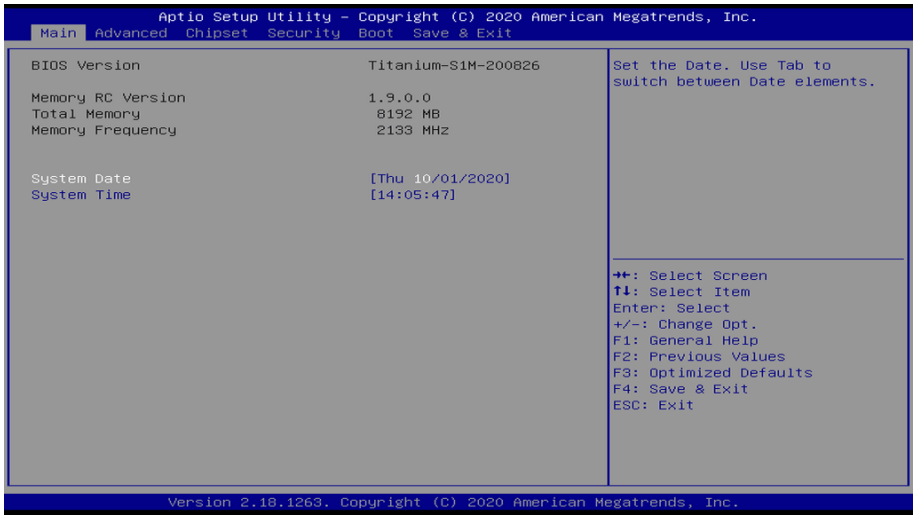

Illustration 15: BIOS

7.1.1 COM Port configuration

COM Port configuration

Argon

In order for RS-232, RS-422 and RS-485 to be recognized on the COM port, the following settings must be made in the BIOS:

1. Select "Advanced" tab
2. Select "F81804 Super IO Configuration"
3. Select "Serial Port1 Configuration"
4. Make setting in "Device Mode" (RS-422 / RS-485 / RS-232)
5. Save with keystroke "F4" (confirmation with "Yes")

COM Port configuration

Titanium

In order for RS-232, RS-422 and RS-485 to be recognized on the COM port, the following settings must be made in the BIOS:

1. Select "Advanced" tab
2. Select "F81804 Super IO Configuration"
3. Select "Serial Port1 Configuration"
4. Under "F81846 SERIAL PORT1 MODE SELECT" select the mode (RS232, RS422, RS485)
5. If RS422 or RS485 mode has been selected, settings can be made for "RS422/RS485 Termination" or "RTS Auto Flow Control
6. Save with keystroke "F4" (confirmation with "Yes")

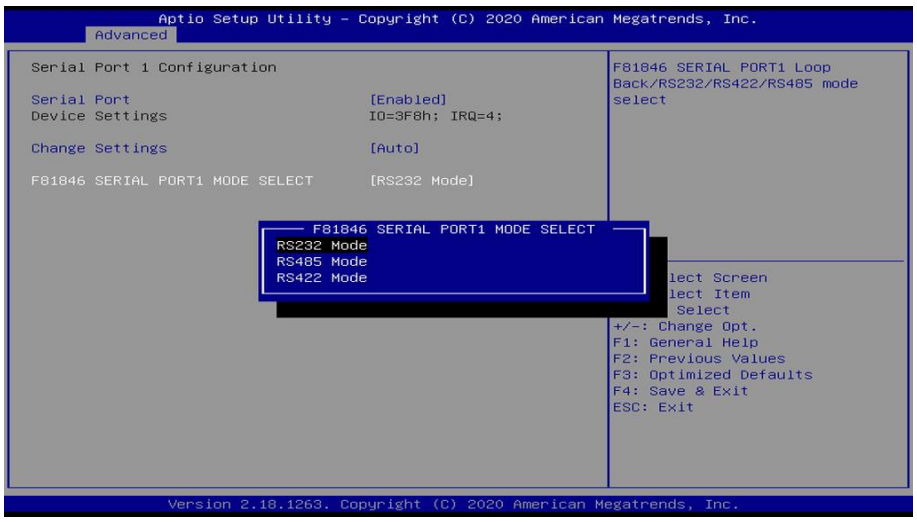

Illustration 16: BIOS COM Port Titanium

7.1.2 Set Boot Priority

Set Boot Priority

Argon / Titanium

If you want to boot from a USB device, the following settings must be made in the BIOS:

1. Select "Boot" tab
2. Select "Boot mode select" "UEFI"
3. Open the "Boot Option #1" by pressing the "Enter" key
4. Select USB device with "Enter"
5. Save with keystroke "F4" (confirmation with "Yes")

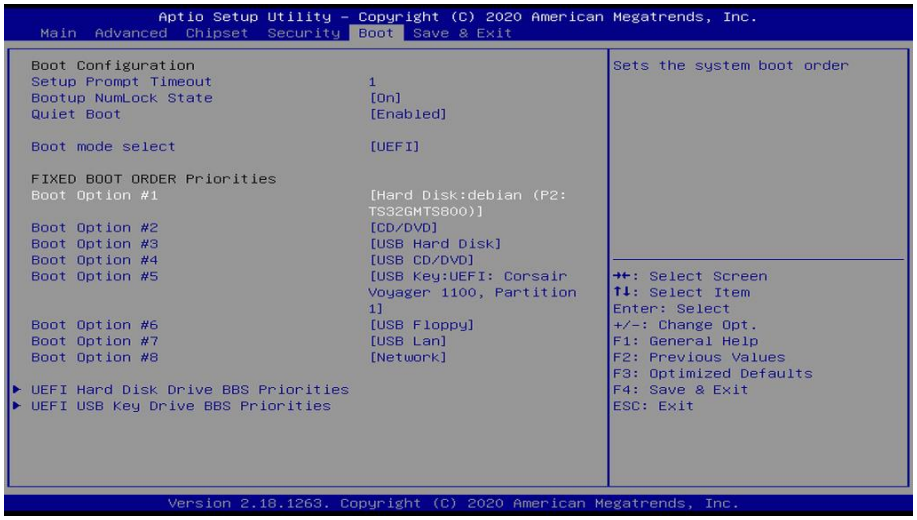

Illustration 17: BIOS Boot Priority

7.2 BIOS Update

7.2.1 Preparation

Copy the AMI BIOS update files to a USB stick

You can obtain the required files from Christ Electronic Systems. These are the same for Argon and Titanium.

- efi
- flash.nsh
- fparts.txt
- Fpt.efi
- Titanium-200826a-S1M.bin (This .bin is only an example, the file can also be named differently)

7.2.2 Perform Update

Insert the bootable USB stick with the required files into the device.

Set the USB stick to Hard Disk Boot Priority in the BIOS. You can read about the procedure under Boot Priority.

The EFI Update Script is automatically detected on the USB stick and starts the update process.

Further procedure Argon

- Confirm the question: "Enter 'q' to quit, any other key to continue:" with Enter.

```
If you don't want to update, press 'q', else press any key to update!
=====================================================================
Enter 'q' to quit, any other key to continue: _
```

Illustration 18: Argon BIOS Update

- Confirm the question "Do you want to continue? Y/<N> or q to quit:" with "y"
- The update is executed
- The message "FPT Operation Successful" indicates successful completion

```
FPT Operation Successful.

Done! Please turn off the system
```

Illustration 19: Argon BIOS Update successful

- Disconnect the power supply
- Restore the power supply and enter the BIOS again (do not reboot)
- Press the F3 key to confirm the question "Load Optimized Defaults" with "Yes"
- Press the F4 key to save and exit

Further procedure Titanium

Confirm the question: "Enter 'q' to quit, any other key to continue:" with Enter.

```
If you don't want to update, press 'q', else press any key to update!
=====================================================================
Enter 'q' to quit, any other key to continue: _
```

Illustration 20: Titanium BIOS Update

- The update is executed
- The message "FPT Operation Successful" indicates successful completion

```
FPT Operation Successful.

Done! Please turn off the system
```

Illustration 21: Titanium BIOS Update successful

- Disconnect the power supply
- Restore the power supply and enter the BIOS again (do not reboot)
- Press the F3 key to confirm the question "Load Optimized Defaults" with "Yes"
- Press the F4 key to save and exit

7.3 OBS Client

7.3.1 Activating the OBS Client

The OBS client is disabled by default.

To enable the OBS client, perform the following steps:

1. Launch Task Manager
2. Open "Startup" tab
3. Select "Hardware Monitor Utility for IBASE" and activate it by clicking on "Enable"

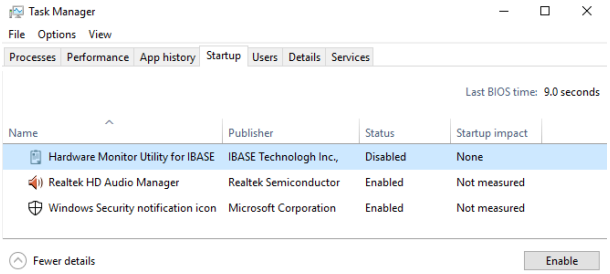

Illustration 22: Task Manager - enable OBS Client

4. Perform a restart of the device

7.3.2 Functions of the OBS Client

To start the OBS client, expand the taskbar and click on the key icon.

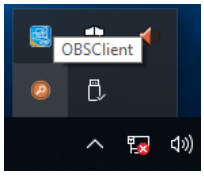

Illustration 23: Start OBS Client

These functions are provided by the OBS Client:

System Information

The System Information provides information about the processor and the operating system.

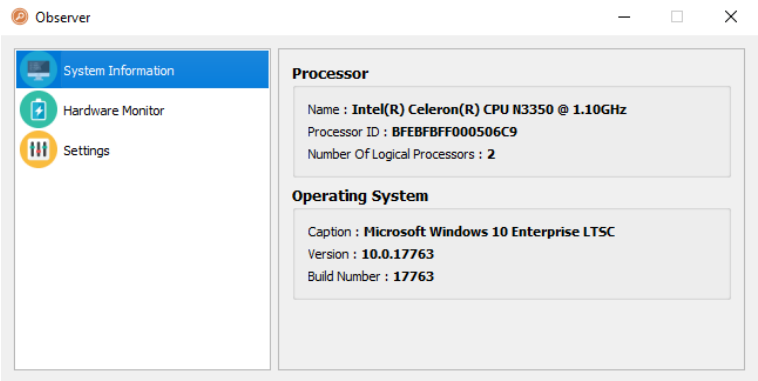

Illustration 24: OBS Client System Information

Hardware Monitor

The Hardware Monitor category indicates the approximate temperatures of the processor and peripherals.

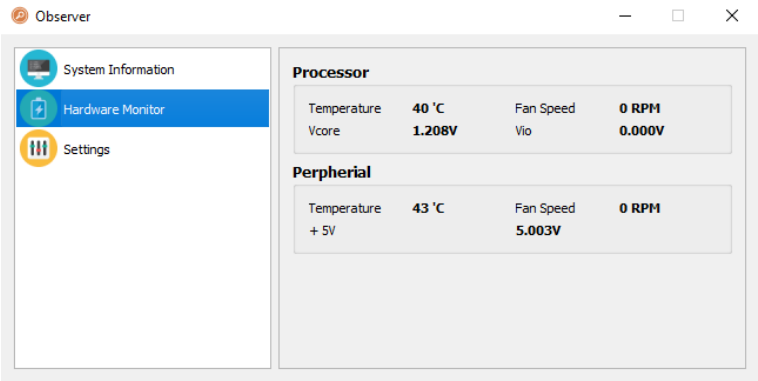

Illustration 25: OBS Client Hardware Monitor

Settings

Various settings can be made in the Settings area.

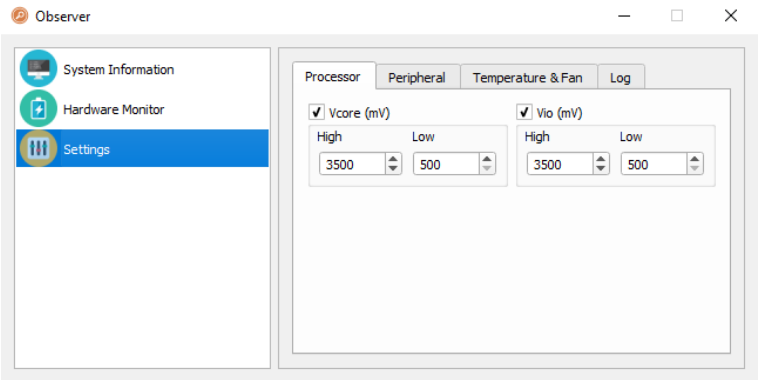

Illustration 26: OBS Client Settings

7.4 Redo Backup and Recovery

The instructions for Christ Redo Backup and Recovery can be found in the Download section of the Christ website: Downloads

7.5 Enhanced Write Filter EWF

Instructions on how to set EWF and UWF filters can be found in the download section of the Christ website: Downloads

8 Maintenance

The following chapter describes maintenance measures that can be performed by a qualified end user.

NOTICE	
	Seals attacked, damage to the housing Loss of IP protection class ➢ There must be no permanent exposure to substances containing large amounts of oils or fats.

8.1 Cleaning

NOTICE	
	Electronics may be damaged Function of the Industrial PC disturbed ➢ The device may only be cleaned when it is switched off or unplugged. ➢ After cleaning, allow the Industrial PC to dry completely.

To clean the device, use a soft cloth moistened with detergent solution.

The cleaning agent must not be applied directly to the device. Under no circumstances may aggressive solvents, chemicals or scouring agents be used.

8.2 Maintenance

It does not require any maintenance on the part of the user.

9 Technical Data

This chapter summarizes the technical data.

9.1 Mechanical Specifications

Housing	Aluminium
Weight	max. 1.2 kg
Dimensions	See table Dimensions
Mounting	DIN Rail, 35 mm x 7.5 mm, DIN Rail 35 mm x 15 mm Wall mounting with screws
Cooling	Passive

Table 20: Mechanical Specifications

9.2 Electrical Specifications

Supply Voltage	9,6 VDC ... 28,8 VDC
Power Consumption	see table Power Consumption
Inrush Current (load-independent)	max. 70A for 80 µs (Used power supply: FSP060-DAAN3)
External Power Supply	SELV
Earthing	Functional Earthing (Cable cross-section has to be identical to the supply lines)
Battery Lifetime	4 years (constantly turned off)

Table 21: Electrical Specifications

9.3 Power Consumption

Architecture	Power Consumption
Argon	up to 25 W
Titanium	up to 45 W

Table 22: Power Consumption

NOTICE

Specifications are maximum values

Peripheral devices are considered (e.g. 1 x USB 2.0 equals 2,5 W)

➢ Provide sufficient power

9.4 Electromagnetic Compatibility

Emitted Interference	EN55032 Class A
Immunity of supply line DC	±2 kV according to IEC 61000-4-4; EFT ± 0,5 kV according to IEC 61000-4-5; Surge asymmetrical
Immunity of signal lines	±1 kV according to IEC 61000-4-4; EFT
ESD	± 4 kV Contact discharge according to EN61000-4-2 ± 8 kV Air discharge according to EN 61000-4-2
Immunity of conducted emission	3 V 150 kHz – 80 MHz, 80% AM nach IEC 61000-4-6
Immunity of high-frequency radiation	3 V/m 80 MHz – 1 GHz, 80% AM nach IEC 61000-4-3 3 V/m 1 GHz – 6 GHz, 80% AM nach IEC 61000-4-3

Table 23: Electromagnetic Compatibility

9.5 Environmental Conditions

Ambient Temperature (Standard Conditions)	0 ~ 50 °C
Ambient Temperature (Different Conditions)	0 ~ 60 °C (see device-specific datasheet)
Storage Temperature	-10 ~ 70 °C
Humidity	5 ~ 80 % (non condensing)
Protection Class (Standard Conditions)	IP20
Transportation and Storage	Suitable packing increases shock resistance
max. Installation Altitude	2000 m
Cooling	Natural Air Convection

Table 24: Environmental Conditions

The following distances in millimeters must be maintained on all sides:

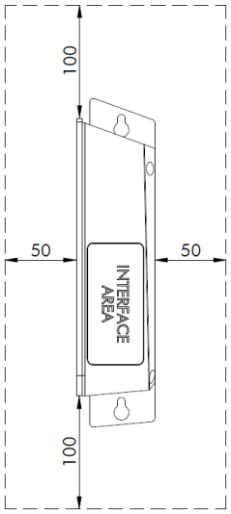

NOTICE	
	Insufficient air supply to the device Overheating ➢ Never cover the device completely or operate it in a small, unventilated housing

9.6 Temperature test

The values for ambient temperature and humidity were determined under worst-case conditions. The maximum workload of the system was achieved by the BurnInTest from PassMark Software Pty Ltd.

The test ran under 100 % utilisation of:

- CPU
- RAM
- 2D and 3D Graphic (x86 only)
- Brightness of the display

9.7 IP Protection Class

The protection class only can be guaranteed under the following conditions:

- The device is installed correctly
- All components and covers of the interfaces are assembled
- Compliance with all environmental conditions

10 Standards and Approvals

The device meets the following requirements.

10.1 CE Marking

The device has been tested in accordance with the applicable EU directives and the associated harmonized standards.

10.2 RoHS

The device complies with the requirement of the EU Directive RoHS 2011/65/EU.

10.3 Electromagnetic Compatibility

The device complies with the requirements of the EU Electromagnetic Compatibility Directive 2014/30/EU with the harmonized standards listed below:

EN 55032: 2015 Class A	Electromagnetic compatibility of multimedia equipment - Emission Requirements
EN 55035: 2017	Electromagnetic compatibility of multimedia equipment - Immunity requirements

10.4 Environmentally Appropriate Disposal

The device must not be disposed of with domestic waste.

The appliance complies with the requirement of the EU Directive WEEE 2012/19/EU, which is symbolised by the symbol with the crossed-out dustbin.

In order to enable environmentally friendly recycling, the various materials must be separated from one another.

Disposal must be carried out in accordance with the applicable legal regulations.

Component parts	Disposal
Enclosure	Metal Recycling
Electronic	Electronics Recycling
Paper / cardboard packaging	Paper / Cardboard boxes Recycling
Plastic packing materials	Plastics Recycling

11 Technical Support

Despite the highest quality standards and detailed function tests of all our products, damage or failure can always occur in the daily handling of our equipment. The failure of a ma-chine in production costs a lot of money. That is why the Christ company processes complaints as quickly as possible.

You can send the device to us without prior notice. All you need to do is fill out the repair cover letter and enclose it with the touch panel or IPC so that the service department can start the repair quickly.When the device arrives, it goes through a defined process that clearly documents all processes and makes the respective status traceable. As soon as your panel or IPC is registered in our system, you will receive a confirmation of receipt so that you can also get a precise overview.

Technical Support can be contacted as follows:

Service, Repair and Technical Support
Phone: +49 8331 8371-500
Fax: +49 8331 8371-497
E-Mail: service@christ-es.de

Or directly via the Homepage.
Christ Service

11.1 Device Seal

A device seal is affixed to every Christ device in order to prove whether the device has been opened by a third party. In case of a defect, please do not open the device, but contact our service department. They will discuss the further procedure with you.

Index of Illustration

Index of Tables